iNTEL MAKiNA
INDUSTRY AND TRADING CORP.

CF 600

Copy Milling Machine

Last updated: June 29, 2026



Description

Copy milling machine enables the opening of door handle recesses and wing profile channels.

Highlights

- ✓ Manually operated under the guidance of the copy milling template follower.
- ✓ Time losses are prevented with optimal working time.
- ✓ Features manual profile clamping device.
- ✓ The machine is easily positioned on the ground thanks to its adjustable feet.
- ✓ The milling bit depth and height can be easily adjusted.
- ✓ Design compliant with CE standards.

Machine Components



BODY

CF600 Body is a fully enclosed sheet metal base chassis/cabinet that completely separates internal components from the external environment.
Cabin Architecture: Fully enclosed body structure with a hinged and locked wide service door on the front and module mounting holes on the top surface.
Safety and Control: A prominent Emergency Stop button is located in the upper front right area and a lock/release mechanism is positioned on top of the door.
Installation Entries: Pneumatic air couplers and cable passage grommets are provided ready at the bottom and top sections of the body.
In summary; unlike SA/SE series bodies with inclined panels and open compartments, it features a more compact, straight-lined, and fully protected cabin structure.



UPPER GROUP

CF600 Upper Group is a heavy-duty milling and drilling head module mounted on the CF600 closed chassis.
Processing Head (Spindle & Motor): Gray colored vertical AC motor, horizontal/vertical slide mechanism, and lockable adjustment blocks provide high cutting performance.
Fixturing and Support: Two pneumatic pistons on the front rigidly clamp the workpiece; black supports and the long shaft on the right ensure precise profile alignment.
Guiding and Control: Moves on two vertically ground shafts; vertical stroke is applied via the left rear control lever; drilling depth is limited by the lower stopper.
In summary; it has the same mechanical processing structure as the SA510 Upper Group, and differs with its gray motor design and mounting details suitable for the CF600 fully enclosed cabinet.

Technical Drawings

Technical Drawing 1

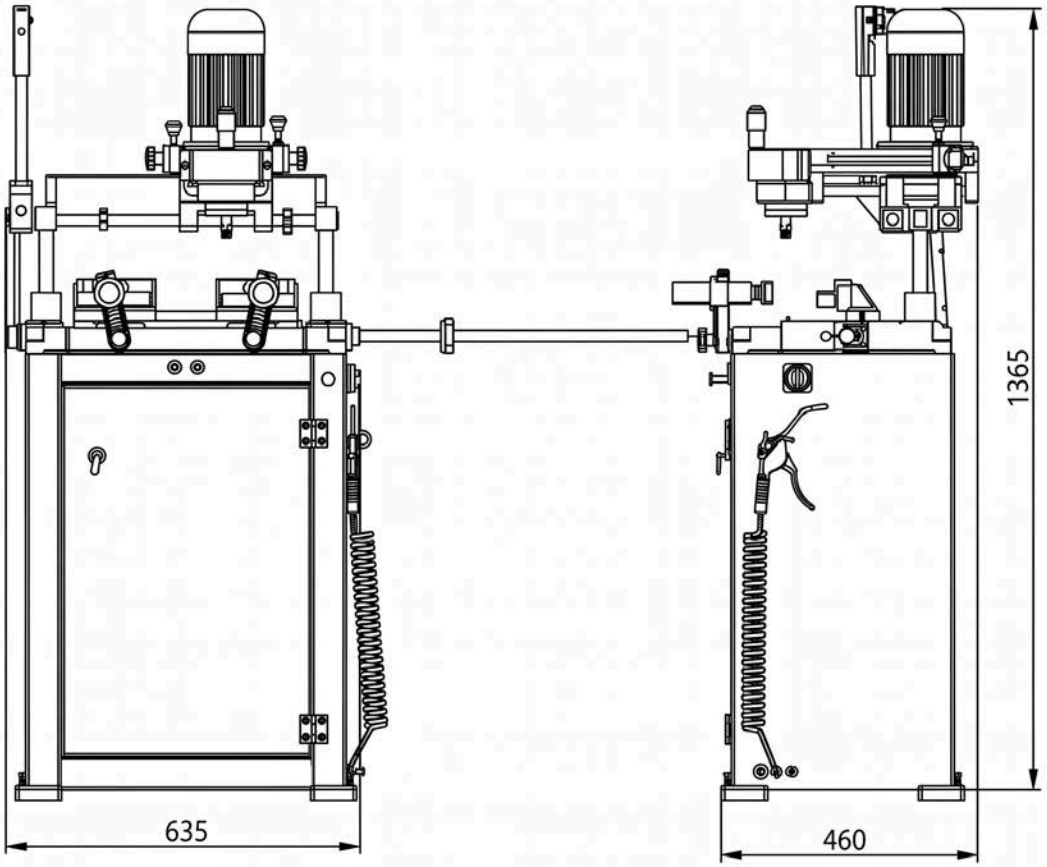

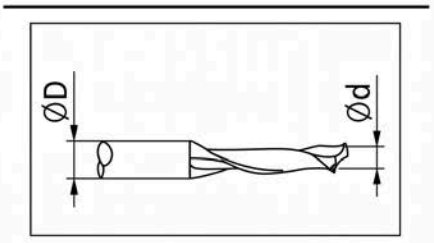

ØD	Ød
8 mm	5 mm

Technical Drawing 2



Technical Specifications

Technical Specifications

Motor Power	**1.1 kW**
Motor Speed	**11000 rpm**
Air Pressure	**6-8 Bar**
Air Consumption	**5 Lt/d**
Voltage	**400 V 50 Hz**
Weight	**77 Kg**
Length	**560 mm**
Width	**700 mm**
Height	**1400 mm**

iNTEL MAKiNA
INDUSTRY AND TRADING CORP.

Kayapa Organized Industrial Zone, Mavi St. No:45/45 Nilüfer,
BURSA/TURKIYE
+90 (224) 504 30 32 | info@intelmakina.com
www.intelmakina.com