iNTEL MAKiNA
INDUSTRY AND TRADING CORP.

PD 100

Door Leaf Handle Cavity Preparation Machine

Last updated: June 30, 2026



Description

Machine designed for door leaf handle cavity preparation.

Highlights

- ✓ 1 vertical and 2 horizontal copy milling motors are available.
- ✓ Can process 3 sides of PVC profile quickly and precisely without turning.
- ✓ 4 pneumatic clamps comprising 2 vertical and 2 horizontal are included.
- ✓ Horizontal and vertical ends are pneumatic with 3 different diameters: Ø11, Ø16, and Ø18.
- ✓ Offers fast and easy operation without the need for templates.
- ✓ Provides user comfort with ergonomic handle design.
- ✓ Metering and support system is available on both right and left sides.

Machine Components



Control Handle

Control is provided via joystick handle

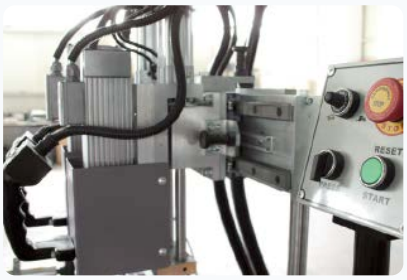

Operator Panel

Controlled with buttons shown in the photo.



Cutting Tools

Cutting tools must be inspected.

Technical Drawings

Technical Drawing 1

TEKNİK VERİLER						
TEKNİK ÖZELLİKLER	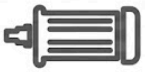		 BAR	HAVA TÜKETİMİ	 G x U x Y	
PD 100	2 kW x 1 1.1 kW x 2 220V 300Hz	18000 RPM	6-8 Bar	10 Lt/dk.	900 x 600 x 1600 mm	180 kg

Technical Drawing 2

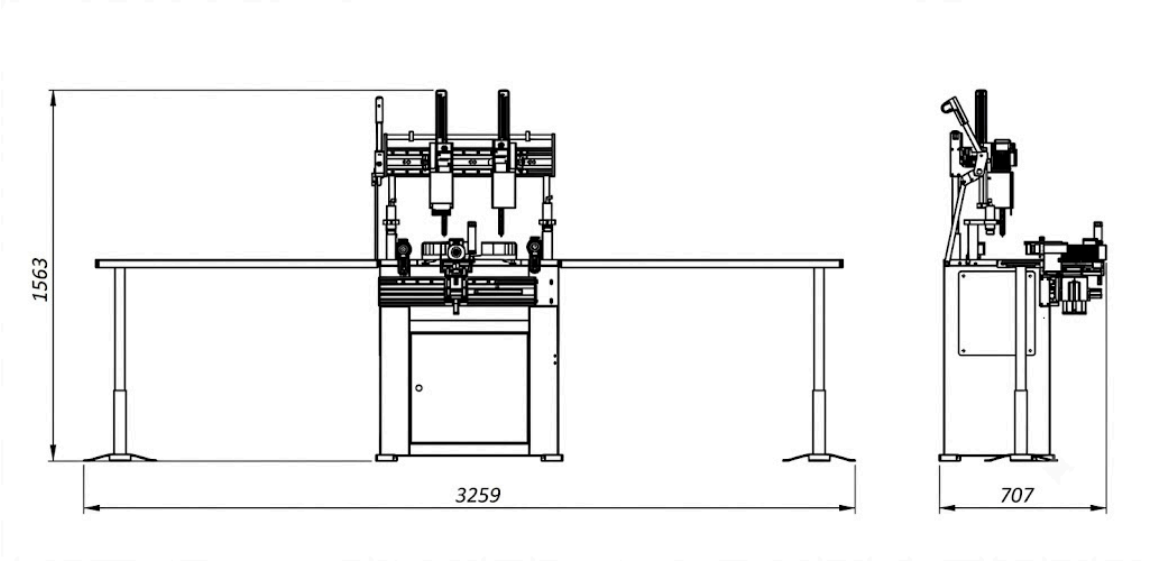

Technical Specifications

Technical Specifications

Motor Power	**1x 2 kW - 2x 1.1 kW**
Motor Speed	**18000 rpm**
Air Pressure	**6-8 Bar**
Air Consumption	**10 Lt/d**
Voltage	**220V 300Hz**
Weight	**180 Kg**
Length	**900 mm**
Width	**600 mm**
Height	**1600 mm**

iNTEL MAKiNA
INDUSTRY AND TRADING CORP.

Kayapa Organized Industrial Zone, Mavi St. No:45/45 Nilüfer,
BURSA/TURKIYE
+90 (224) 504 30 32 | info@intelmakina.com
www.intelmakina.com