iNTEL MAKiNA
INDUSTRY AND TRADING CORP.

PDM 100

Door Panel Handle Preparation Machine

Last updated: June 30, 2026



Description

Machine designed for door panel handle preparation. (Economic series)

Highlights

- ✓ 1 vertical and 2 horizontal copy milling motors available.
- ✓ Capable of processing 3 sides of PVC profile quickly and precisely without rotation.
- ✓ 4 pneumatic clamps consisting of 2 vertical and 2 horizontal configurations.
- ✓ Horizontal and vertical spindles are pneumatic with 3 different diameters: Ø11, Ø16, and Ø18.
- ✓ Provides ease of use with ergonomic handle design.
- ✓ Measurement and support system available on both right and left sides.

Machine Components

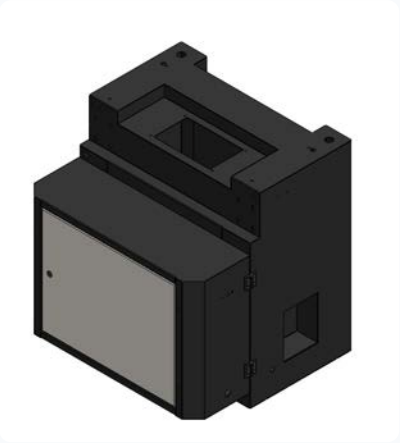

FRAME

The PDM100 Frame is a modular machine chassis that integrates control units and mechanical systems into a single rigid structure.

Key Features

Front Bottom Section: Protected area for electrical/electronic panel and control assembly behind a hinged cover.

Upper Section: Central opening and mounting holes for axially moving parts, transmission mechanisms, and linear elements.

Right Side Window: Service opening for cable passage or maintenance/ventilation purposes.

General Structure: Durable and precise sheet-block construction with high torsional rigidity.

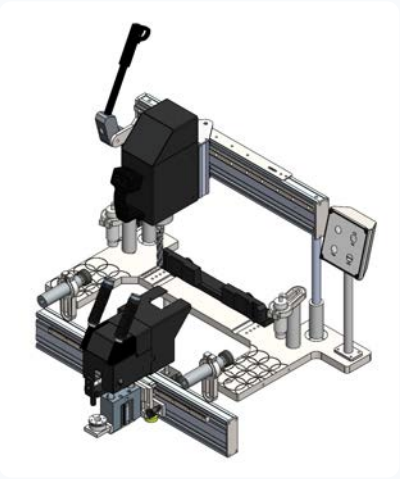

UPPER GROUP

The PDM 100 Upper Group is the main processing unit integrated into the lower frame and performs cutting, drilling, or grooving operations on the material.

Key Features

Dual Processing Head: Upper main head with vertical control lever and front lower processing unit with dual handles.

Precise Movement: Smooth stroke tracking via linear rails and ball carriage systems on aluminum profiles.

Clamping & Fixture: Adjustable clamps and support arms that securely hold parts of different sizes.

Control Panel: Ergonomic operator button panel positioned on the right side.

Technical Drawings

Technical Drawing 1

TEKNİK VERİLER						
TEKNİK ÖZELLİKLER						
			BAR	Hava Tük.	GxUxY	
PDM 100	2 kW x 1 1.1 kW x 1 220V 300Hz	18000 d/d	6-8 Bar	8 Lt/dk.	900x700x1600 mm	150 kg

Technical Drawing 2

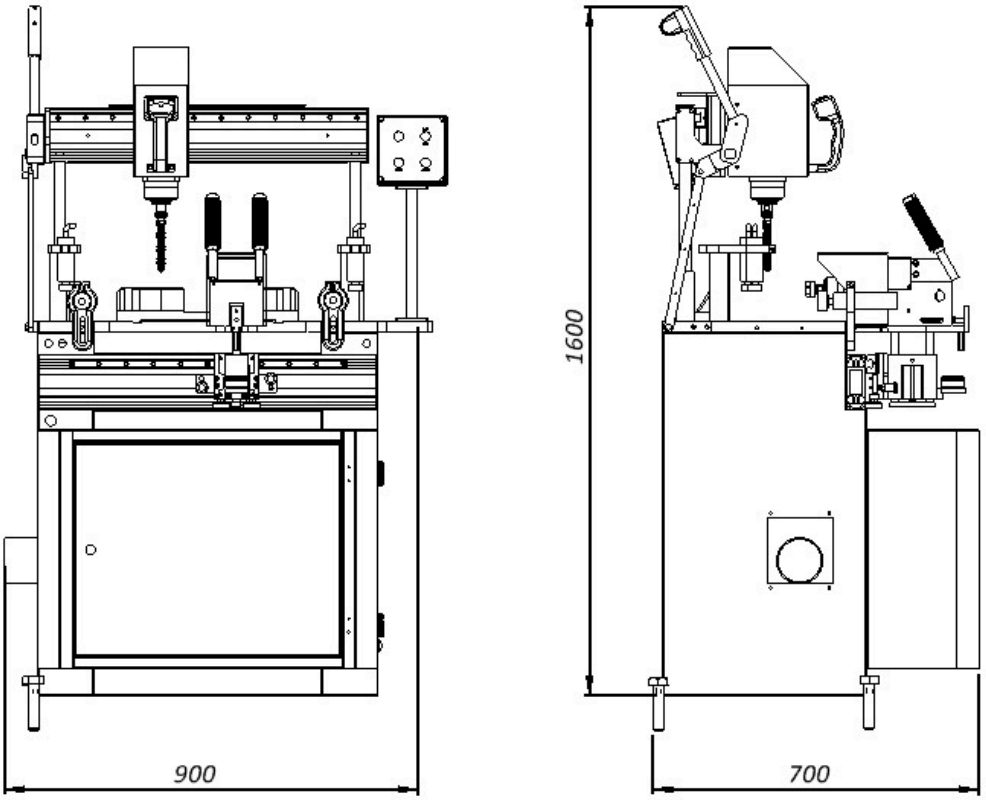

Technical Specifications

Technical Specifications

Motor Power	**1x 2kW - 2x 1.1 kW**
Motor Speed	**18000 rpm**
Air Pressure	**6-8 Bar**
Air Consumption	**8 Lt/d**
Voltage	**220V 300Hz**
Weight	**150 Kg**
Length	**900 mm**
Width	**700 mm**
Height	**1600 mm**

iNTEL MAKiNA
INDUSTRY AND TRADING CORP.

Kayapa Organized Industrial Zone, Mavi St. No:45/45 Nilüfer,
BURSA/TURKIYE
+90 (224) 504 30 32 | info@intelmakina.com
www.intelmakina.com