CW-400

FOUR HEAD WELDING MACHINE

TECHNICAL FEATURES

Used for welding four corners of plastic profiles.
• Pneumatic motion
• Automatic frame output unit
• Process programming and large memory
• Safe working area with safety barrier
• Welding time adjustment and digitally controlled heating
• Temperature adjustment between 0 °C and 350 °C with electronic thermostat
• Touchscreen control panel
• Quick and easy to replace welding mold system
• Batch processing and precision measurement
• 0.2 mm welding range
• Quick and easy to replace hot press teflon
• Remote access
• Data transfer over remote network connection, Ethernet and USB
• Alarm and warning sign on screen
• Uniform heat distribution on plate

STANDART EQUIPMENT

• Barcode Reader
• Hot Press Teflon (5 meter)
• Safety sensor

OPTIONAL EQUIPMENT

• Special Mold
• Gasket Pressing System
• Safetys Barrier
• Profile Waiting Unit

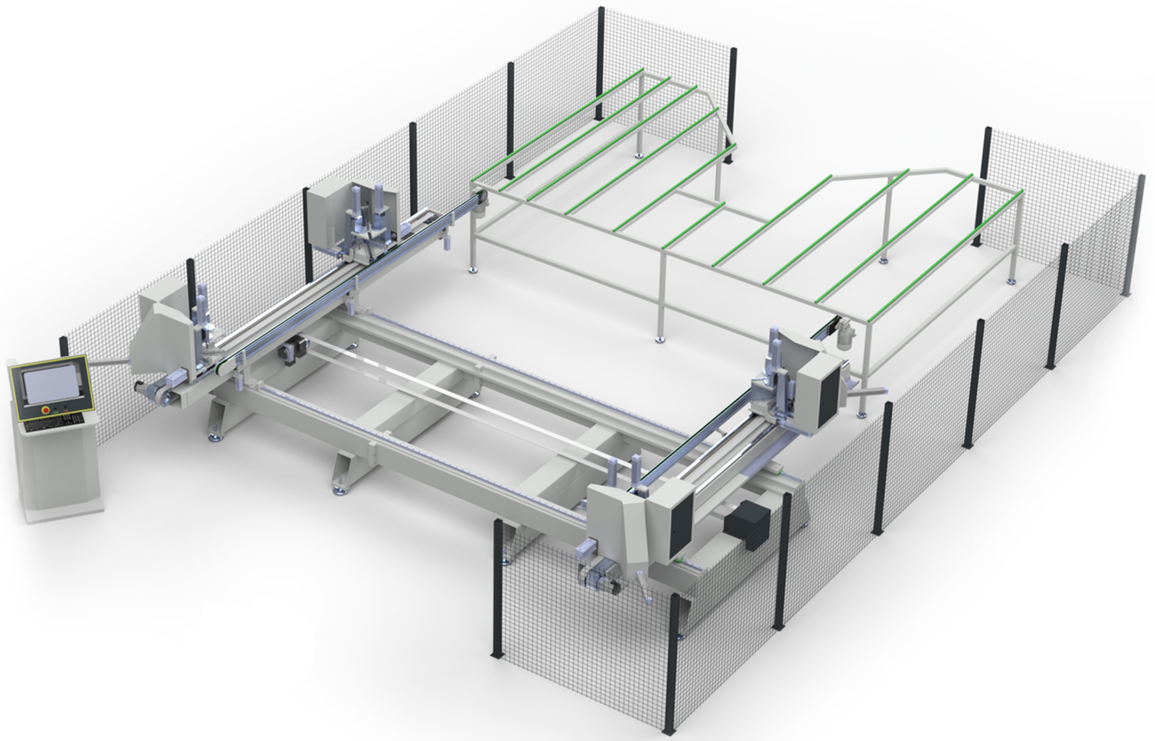

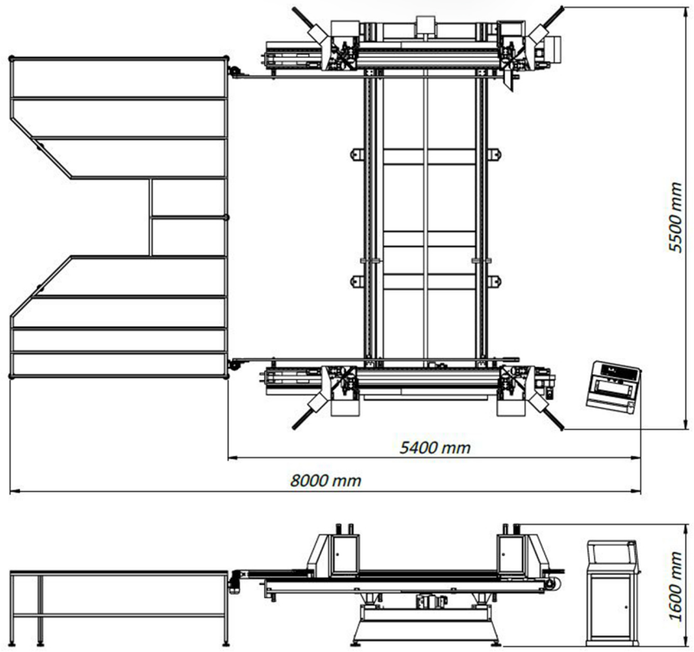

TECHNICAL FEATURES

ELECTRICAL VALUE	: 380-400V, 3ph, 50-60 Hz
TOTAL KW	: 12.5 kW
MOTOR KW	: 4.2 kW
AIR CONSUMPTION	: 200-250 lt/min
AIR PRESSURE	: 6-8 Bar

PROFILE DIMENSIONS

MIN. HEIGHT	: 40 mm
MAX. HEIGHT	: 160 mm
MIN. FRAME SIZE	: 530 x 420 mm
MAX. FRAME SIZE	: 3750 x 2650 mm
WELDING ANGLE	: 90 °

MACHINE DIMENSIONS

MACHINE HEIGHT	: 1600 mm
MACHINE LENGHT	: 4400 mm
MACHINE WIDHT	: 5500 mm
MACHINE WEIGHT	: 2100 kg