iNTEL MAKiNA
INDUSTRY AND TRADING CORP.

SE 510

Triple Arm Drilling, Water Discharge, Copy Router Machine

Last updated: June 29, 2026



Description

The copy routing section enables the opening of door handle recesses and sash espagnolette channels. The triple drilling section performs the opening of arm location holes in the sashes.

Highlights

- ✓ Copy router is manually operated under the guidance of a template follower tip.
- ✓ Used in opening water discharge channels of PVC profiles.
- ✓ Motor selection is performed using buttons.
- ✓ Time losses are prevented with optimum working time.
- ✓ Pneumatic profile clamping device is available.
- ✓ Profile clamping operation is performed with a manual control valve on the chassis.
- ✓ The machine is easily positioned on the ground thanks to its adjustable feet.
- ✓ Router heads are freely adjustable in depth and height opening.
- ✓ Design complies with CE standards.

Machine Components



CABINET

SE510, endüstriyel işleme tezgahları için tasarlanmış ağır hizmet tipi sac metal makine şasisidir/kabindir.
Gövde Yapısı: Kaynaklı ve bükümlü sağlam sac konstrüksiyon; alt-sağ kısımda korumalı şartlandırıcı (FRL) yuvası ve yan tarafta entegre pnömatik hava tabancası bulunur.
Kontrol ve Güvenlik: Eğimli ön panelde 2 adet ana pako şalter, başlama/durdurma butonları, mod seçici ve kolay erişilebilir yan Acil Stop butonu yer alır.
Bakım ve Montaj: Ön tarafta kilitli bir panel/elektrik kapağı; üst kısımda ise işleme başlığı montajı ve tahrik motoru bağlantısı için hazırlanmış açıklıklar ve muhafaza plakası mevcuttur.
Tam ortada duran delikli sac ise sıvı ve talaş tahliyesi için tasarlanmıştır.
Özetle; taşlama, pah kırma veya özel pnömatik/mekanik işleme üniteleri için tasarlanmış kompakt, ergonomik ve bakımı kolay bir alt kabindir.

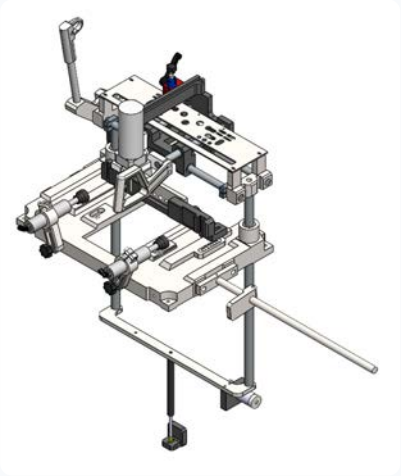

CABINET

SE510 is a heavy-duty sheet metal machine chassis/cabinet designed for industrial processing machine tools.
Cabinet Structure: Welded and bent robust sheet metal construction; with a protected air conditioning unit (FRL) socket in the lower-right section and an integrated pneumatic air gun on the side.
Control and Safety: The angled front panel features 2 main disconnect switches, start/stop buttons, mode selector, and an easily accessible side Emergency Stop button.
Maintenance and Assembly: A locked panel/electrical cover on the front; openings and protective plates on the upper section for processing head mounting and drive motor connection.
A perforated sheet metal plate in the center is designed for coolant and chip discharge.
In summary; a compact, ergonomic, and easy-to-maintain lower cabinet designed for grinding, deburring, or special pneumatic/mechanical processing units.



UPPER ASSEMBLY

SE510 Upper Assembly is a copy router head module that opens locks, handle recesses, and specially shaped channels on profiles.

Copy Router Head: Achieves precise copying/routing through a high-speed cylindrical spindle motor, an ergonomic guidance handle on the front, and a patterned template plate on the upper rear.

Pneumatic Clamping: Two pneumatic pistons on the front and support blocks (including the right extension shaft) clamp the workpiece axially and prevent vibration.

Guiding and Movement: Moves on vertically ground shafts; stroke is applied up/down with the rear control lever and depth is limited by the lower mechanical stop.

Difference from SA505: While SA505 is a standard heavy-duty router head, SE510 is a complete Copy Router system with integrated template and guidance lever.

Technical Drawings

Technical Drawing 1

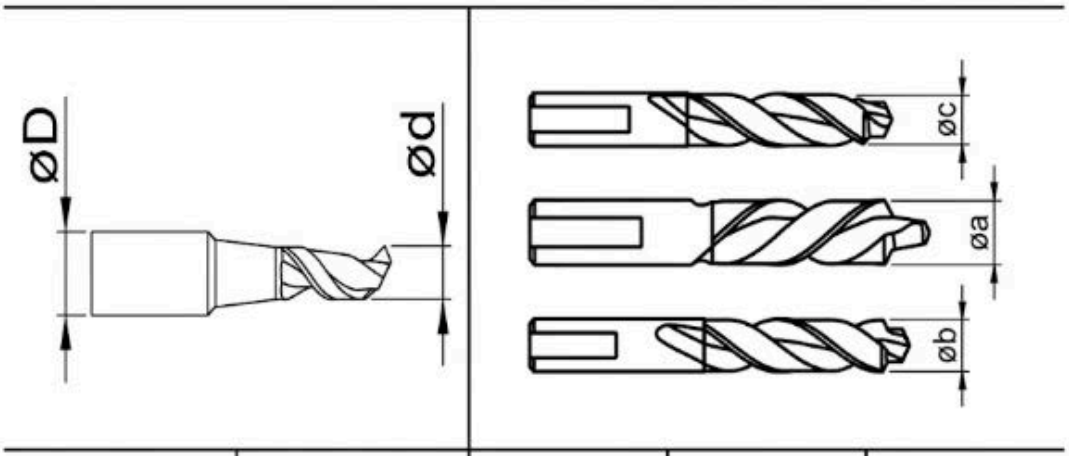

øD	ød	øa	øb	øc
8 mm	5 mm	13 mm	10 mm	10 mm

Technical Drawing 2

TECHNICAL DATA									
TECHNICAL FEATURES			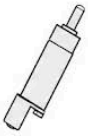		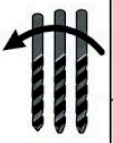	 BAR	Hava tüke. Air cons.	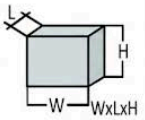	
SE-510	0.65 KW 14000 d/dk	1.1 KW 380V 50Hz	0.65 KW 14000 d/dk	14000 d/dk	1500 d/dk	6-8 Bar	5 Lt/dk. Lt/min.	103x66x140 cm	90 kg

Technical Drawing 3

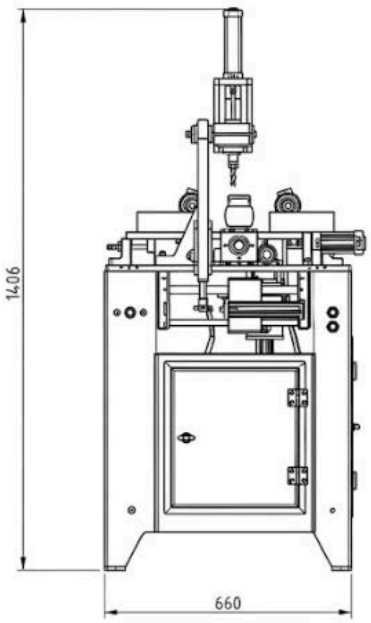

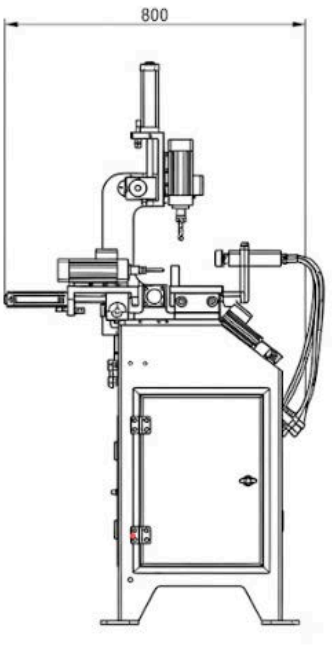

Technical Specifications

Technical Specifications

Motor Power	**1x 1.1 kW - 1x 0.65 kW**
Motor Rotation Speed	**14000 rpm**
Tool Rotation Speed	**15000 rpm**
Air Pressure	**6-8 Bar**
Air Consumption	**5 Lt/min**
Voltage	**380V 50 Hz**
Weight	**90 Kg**
Length	**1030 mm**
Width	**660 mm**
Height	**1400 mm**

iNTEL MAKiNA
INDUSTRY AND TRADING CORP.

Kayapa Organized Industrial Zone, Mavi St. No:45/45 Nilüfer,
BURSA/TURKIYE
+90 (224) 504 30 32 | info@intelmakina.com
www.intelmakina.com